Cultured Marble Standard Top

Ensuite (610 x 320)

Picture

Colour	White or Ivory
Tap Holes	1, 2 or 3 (Reversible LH/RH)
Plug & Waste	40mm
Weight	8.5 kgs
Bowl Capacity	6 litres
Material	Cultured Marble
Guarantee	10 years

Cross Section A-A

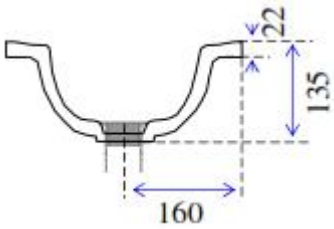

End Elevation

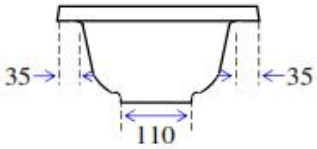

Plan View

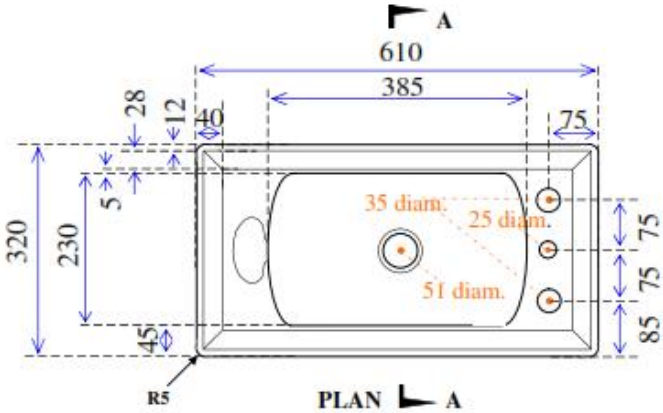

Front Elevation

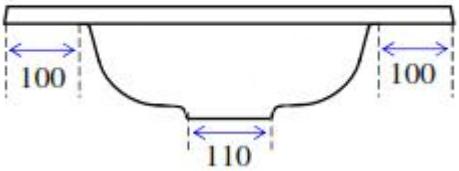

Not to Scale

ALL DIMENSIONS SHOWN IN MILLIMETERS

Specifications subject to change without notice. All sizes are nominal within industry tolerances.

Measurements are for representation purposes only and do not constitute as scale plans.